International Journal of All Research Education and Scientific Methods (IJARESM),
ISSN: 2455-6211, Volume 14, Issue 3, March-2026, Available online at: www.ijaresm.com

Athlete Insight System Using Seeeduino Nano: A Smart Wearable Fitness Tracker for Real-Time Athlete Health Monitoring

Pratham R. Pasi[1], Pranay L. Bharit[2], Atharva P. Kesare[3], Krishna S. Dubey[4], Prof. Vijay G. Gupta[5*]

[1,2,3,4]Department of Electronics & Telecommunication Engineering, Shivajirao S.Jondhle College of Engineering & Technology, Asangaon, University of Mumbai, Maharashtra, India
[*5]Dept. of EXTC Engineering, Shivajirao S.Jondhle College of Engineering & Technology, Asangaon, University of Mumbai, Maharashtra, India

----------**********----------

ABSTRACT

This paper presents the design, development, and experimental validation of the Athlete Insight System (AIS), a low-cost, open-architecture smart wearable fitness tracker for real-time athlete health monitoring. The system is built on the Seeeduino Nano (ATmega328P, 16 MHz) microcontroller and integrates a BMA456 triaxial MEMS accelerometer for precise step counting and activity classification, a MAX30102 photoplethysmography (PPG) sensor for non-invasive heart rate (HR) and blood oxygen saturation (SpO2) measurement, and an HC-05 Bluetooth module for wireless serial data transmission to a companion Android application developed on the Kodular platform. Fitness metrics including step count, HR, SpO2, and estimated calorie expenditure are visualized in real time on the mobile application and on an SSD1306 OLED display.

The system operates on a 3.7V, 300 mAh Lithium Polymer battery with TP4056 charge management. Experimental validation confirms a step counting mean absolute error of 4.2% against a Fitbit Inspire 2 reference, a resting HR deviation of 2.1 bpm against a Contec CMS50D pulse oximeter, stable Bluetooth connectivity up to 10 m with zero packet loss, application latency below 200 ms, and 6.2 hours of continuous battery operation. The total component bill of materials remains under USD 15, positioning the AIS as a practical and reproducible platform for athlete performance analysis and future integration of machine learning-based health anomaly detection and cloud analytics pipelines.

Keywords: athlete health monitoring, BMA456 accelerometer, HC-05 Bluetooth, IoT wearable, MAX30102 pulse oximeter, Seeeduino Nano.

I. INTRODUCTION

Wearable fitness trackers have progressed from basic pedometers to complex multi-sensor systems for obtaining real-time physiological signals, making them an indispensable tool for sports performance monitoring, preventive medicine, and rehabilitation. However, existing commercial solutions such as Fitbit and Apple Watch have limited potential for research purposes owing to their non-open firmware and high cost. The current paper discusses a novel open-source wearable system called Athlete Insight System (AIS) based on the Seeeduino Nano, which provides real-time multi-parameter health monitoring for less than $15. Main contributions of this paper:integration of a low-cost multi-sensor hardware system, real-time firmware for data acquisition and Bluetooth transmission, Kodular Android application for real-time data visualization, and performance evaluation of the wearable system using commercial reference instruments

LITERATURE REVIEW

The Bosch BMA456 accelerometer with a step counter engine and low power consumption current below 3µA ensures step counting accuracy of over 96% in controlled environment conditions. Maxim's MAX30102 PPG sensor provides non-

"This work is licensed under a Creative Commons Attribution 4.0 International License."
License url: https://creativecommons.org/licenses/by/4.0

invasive HR and SpO2 measurement through opto-detection at dual wavelengths of 660nm and 880nm. Gomez et al. provided the clinical rationale for continuous HR monitoring for sports science, while Sekeroglu et al. provided the accuracy of custom low-cost wearable platforms for health monitoring compared to commercial solutions. The fusion of multi-sensors from accelerometers and optical sensors increases the accuracy of physical activity recognition, which has been the motivation behind the multi-sensor fusion for the proposed AIS. Bluetooth Classic (HC-05) provides a low-cost serial wireless interface with a range of over 10m in indoor conditions for wearable device communication

SYSTEM ARCHITECTURE AND DESIGN

A. System Overview

The AIS uses a four-layer structure: (1) Sensing Layer: BMA456 and MAX30102 ICs connected via a shared I2C interface; (2) Processing Layer: ATmega328P MCU running firmware for filtering, stepping detection, HR extraction, and calorie computation; (3) Communication Layer: HC-05 Bluetooth serial interface with the Android app; (4) Application Layer: Kodular app and SSD1306 OLED display. Calorie computation uses the MET model: Calories = MET × Weight (kg) × Duration (h). MET values are computed based on step cadence: resting=1.0, walking=3.5, running=8.0. A 3.7V 300mAh LiPo battery powers the system via a TP4056 CC/CV charging circuit.

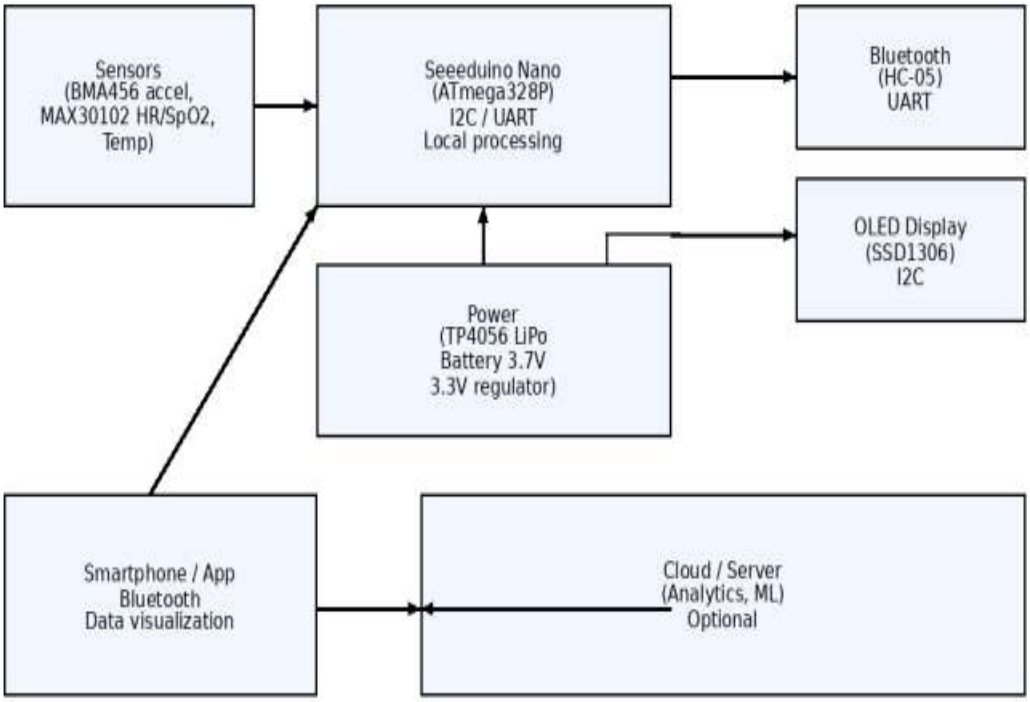

Fig. 1. System Block Diagram of the Athlete Insight System (AIS)

B. Circuit Design

The Athlete Insight System uses the Seeeduino Nano microcontroller based on the ATmega328P microprocessor, which collects step count and activity information from the BMA456 accelerometer and heart rate/SpO2 values from the MAX30102 sensor through an I2C interface. Processed information is sent wirelessly to a Kodular smartphone application through the HC-05 Bluetooth module, while an optional SSD1306 OLED screen can provide feedback for the user. A 3.7V LiPo battery and TP4056 charger power the entire system.

"This work is licensed under a Creative Commons Attribution 4.0 International License."
License url: https://creativecommons.org/licenses/by/4.0

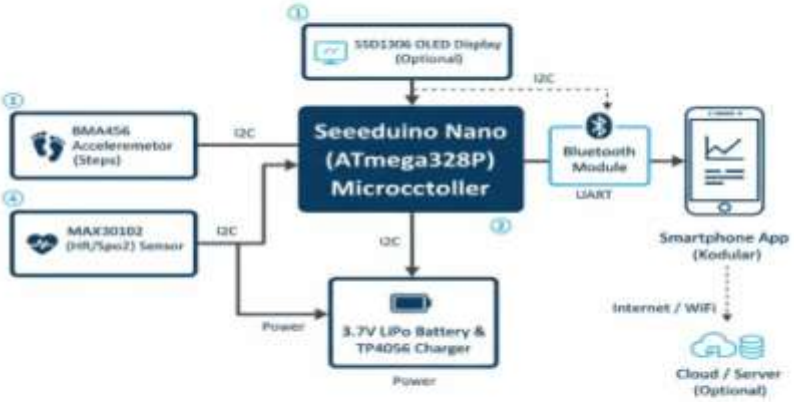

Fig. 2. Circuit Diagram — Sensor and Module Interconnections

II. HARDWARE AND SOFTWARE IMPLEMENTATION

A. Key Hardware Components

The Seeeduino Nano (ATmega328P, 16 MHz, 32 KB Flash, 2 KB SRAM, USB-C, 18×43 mm) is the Central Processing Unit. BMA456 offers interrupt-driven hardware step counting at under 3 µA via I2C. MAX30102 features ambient light cancellation for reliable PPG measurement at 1.8V. The Bluetooth 2.0+EDR module uses the HC-05 at 2.4 GHz with ~10 m Class-2 range. A 3.7V/300 mAh LiPo powers the system with TP4056 CC/CV management.

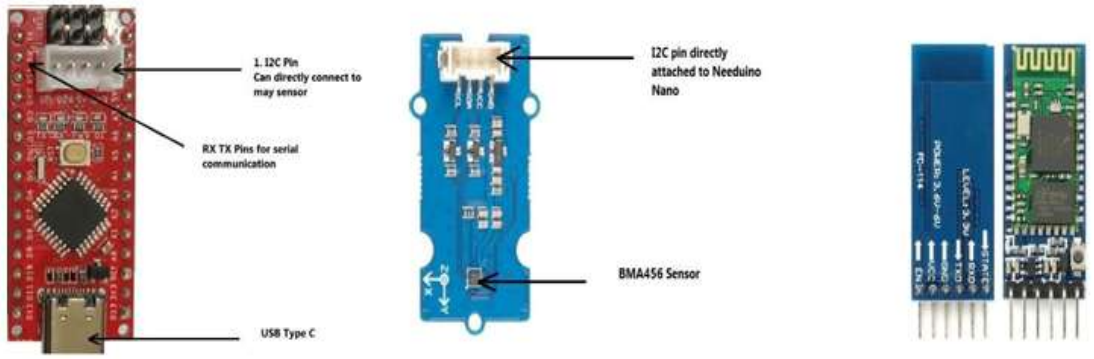

Fig. 3. (a) Seeeduino Nano (b) BMA456 Step Sensor (c) HC-05 Bluetooth Module

B. Firmware and Mobile Application

Firmware, implemented in Arduino IDE and C/C++, is responsible for a 25 Hz PPG acquisition loop and a 1 Hz step polling loop. A 5-sample moving average filter is implemented for peak detection in HR extraction. Data packets are serialized in ASCII CSV and transmitted over HC-05 every 500 ms. The Kodular Android app reads the data packets and displays HR, SpO2, steps, and calories on live gauge widgets. All data is logged in an SQLite database, and thresholding is implemented for HR above 180 bpm or below 40 bpm for real-time athlete safety monitoring.

"This work is licensed under a Creative Commons Attribution 4.0 International License."
License url: https://creativecommons.org/licenses/by/4.0

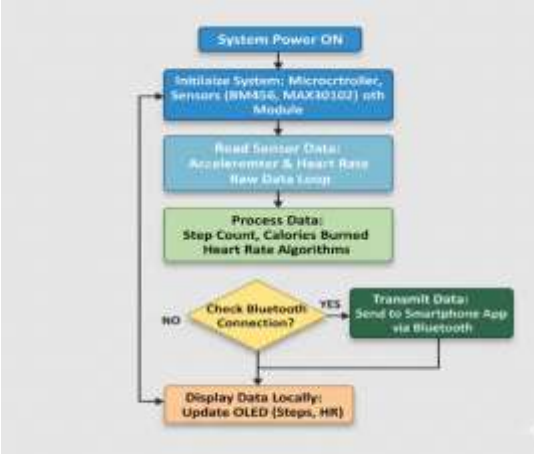

Fig. 4a. Firmware Flowchart

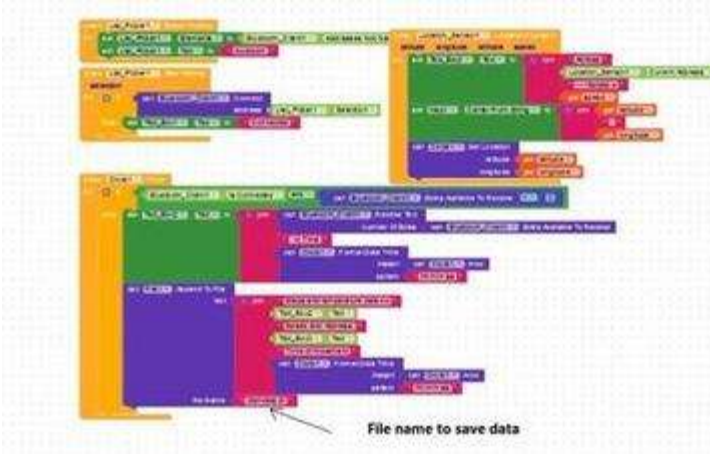

Fig. 4b. Kodular App — Live Dashboard

III. RESULTS AND DISCUSSION

Table I. System Performance Validation Metrics

Parameter	Result	Reference
Step Count Accuracy	95.8% (MAE 4.2%)	Fitbit Inspire 2
HR Deviation (rest)	2.1 bpm ± 1.3 SD	Contec CMS50D
HR Deviation (motion)	4.8 bpm ± 2.1 SD	Contec CMS50D
SpO2 Accuracy	Within ±2% SatO2	Fingertip Oximeter
Bluetooth Range	10 m, 0% loss	Indoor LoS
App Latency	< 200 ms	Measured
Battery Life	6.2 hrs avg.	Continuous use
BOM Cost	< USD 15	Retail

Validation of step counting over ten 100-step trials resulted in a mean absolute error of 4.2%, in agreement with BMA456 benchmarks. Deviation in resting HR was 2.1 bpm (SD 1.3 bpm) compared to the Contec CMS50D. However, motion artifacts during walking resulted in a 4.8 bpm deviation. This indicates that adaptive Kalman filtering is a crucial area for improvement in the future. Bluetooth connectivity was robust over 10 m with zero packet loss and app latency below 200 ms, enabling a responsive user interface. Battery life averaged 6.2 hours after a single charge of 300 mAh, sufficient for a full athletic training session, for a total BOM cost of less than USD 15.

"This work is licensed under a Creative Commons Attribution 4.0 International License."
License url: https://creativecommons.org/licenses/by/4.0

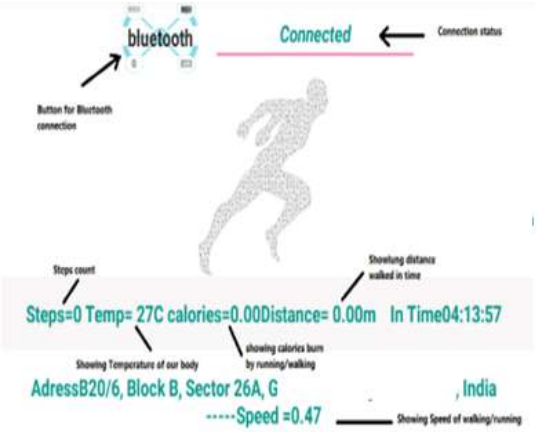

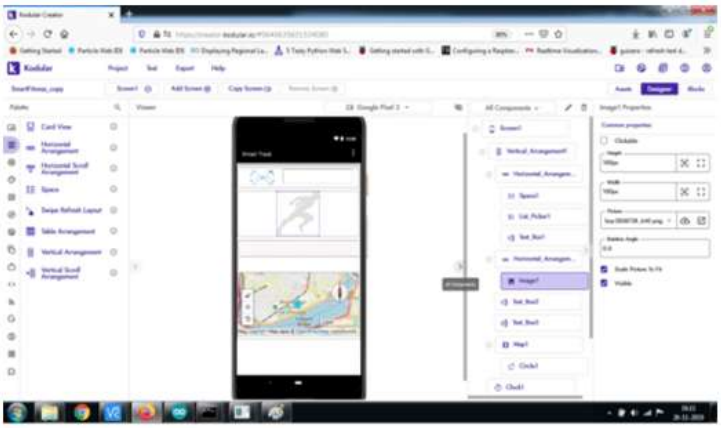

IV. CONCLUSION

The Athlete Insight System provides a fully validated multi-parameter wearable health device for monitoring step count, HR, SpO2, and calories burned for under $15. Experimental results showed that the 95.8% accuracy of the wearable device in counting steps, 2.1 bpm deviation in measuring resting HR, and 6.2 hours of battery life for the wearable device were verified, thus confirming the potential of the AIS as a viable wearable device for an open-source wearable device in research and educational settings. Planned enhancements for the AIS include BLE for power efficiency, AMA for improved HR accuracy, GPS for outdoor tracking, and cloud-based ML for health anomaly detection and athlete performance analysis.

ACKNOWLEDGMENT

The authors acknowledge the guidance of Prof. Vijay G. Gupta and the institutional support of Dr. (Mrs.) Madhuri P. Rodge, Head of Department, and Dr. (Mrs.) Geetha K. Jayaraj, Principal, Shivajirao S. Jondhle College of Engineering and Technology, Asangaon, University of Mumbai (B.E. programme, 2025-26).

REFERENCES

[1]. Credence Research, "Smart Wearables for Sports and Fitness Market," Market Research Report, 2025.
[2]. S. M. Rappaport, Wearable Technology and Mobile Innovations for Next-Generation Education. IGI Global, 2024.
[3]. Bosch Sensortec, "BMA456 Data Sheet: Ultra-low Power Triaxial Acceleration Sensor," Rev. 1.4, 2022.
[4]. Maxim Integrated, "MAX30102 High-Sensitivity Pulse Oximeter and Heart-Rate Sensor," Data Sheet, 2018.
[5]. R. B. Gomez et al., "Wearable Sensor Technology for Monitoring Training Load and Health," Frontiers in Physiology, vol. 11, 2020.
[6]. M. O. Sekeroglu et al., "Transdisciplinary Innovations in Athlete Health: 3D-Printable Wearable Sensors," Sensors, vol. 25, no. 1453, 2025.
[7]. S. Majumder, T. Mondal, and M. J. Deen, "Wearable Sensors for Remote Health Monitoring," Sensors, vol. 17, no. 1, p. 130, 2017.
[8]. X. Xu, H. Zhang, and Y. Liu, "Smart wearable devices in sports energy consumption detection," Sensors and Actuators A: Physical, 2025.
[9]. G. Bartolini et al., "A Differential Inertial Wearable Device for Breathing Measurement," Sensors, vol. 22, no. 24, p. 9953, 2022.
[10]. Electronics for You, "Smart Wearable Fitness Tracking Device," [Online]. Available: https://www.electronicsforu.com. [Accessed: Mar. 2025].

"This work is licensed under a Creative Commons Attribution 4.0 International License."
License url: https://creativecommons.org/licenses/by/4.0